VERSITRIM FASCIA SYSTEM

FULLY ADHERED, MECHANICALLY ATTACHED OR STONE BALLAST SINGLE-PLY VERSION

INSTALLATION INSTRUCTIONS

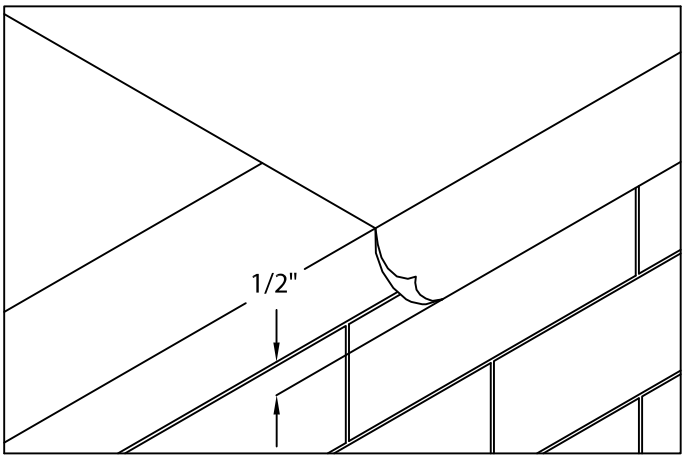

1. Roof Membrane

Position membrane over the roof edge and down outside face of wall, covering treated wood nailer(s) completely. Allow 1/2" excess membrane.

IMPORTANT! Outside edge of treated wood nailer(s) (minimum 2 x 4) shall be aligned flush with or extend slightly past outermost edge of wall. Versitrim Fascia System is for use as a perimeter securement on roof designs where the product is not installed in a waterline. If the product will be in a waterline or requires drainage over the edge, we would recommend the use of Versitrim 2000 Canted Fascia or Versitrim 2000 Drip Edge, depending on desired retention of water or drainage.

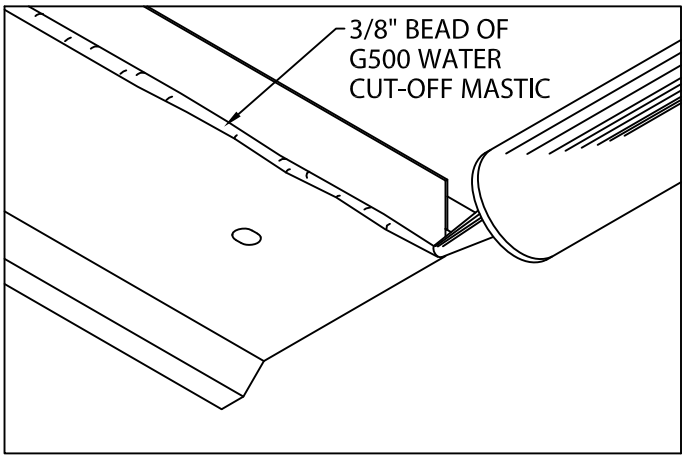

2. Miter & Scupper Retainer Guard (Preparation)

Lay miters and spillout scuppers on deck with outside face down. Be sure aluminum retainer guard is clean and free of dirt or dust. Apply a heavy 3/8" bead of G500 to the right angle intersection of the deck flange and back of retainer guard as shown. Application of G500 is required along the full length of each miter retainer guard.

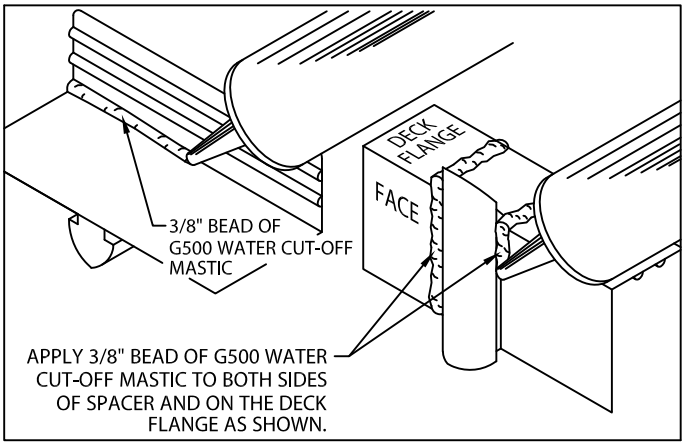

3. Retainer Guard Splice Plates

Apply bead of Versico G500 water cut-off mastic to each splice plate as described in STEP 2. Ensure the sealant is placed into the grooves along the spacer.

CAUTION! Installers shall wear protective eyewear to prevent injury. Do not over-drive fasteners, as stripping can occur at high driver torque. Recommended Driving Tool : 600 - 800 rpm electric drill equipped with depth-sensing nosepiece to prevent over-driving and stripout. Do not use impact type tool.

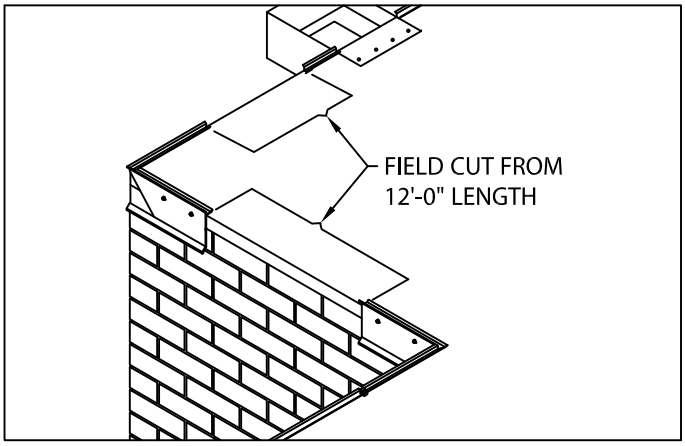

4. Miter Bar Installation

Fold roofing membrane at corners and install miters using the 2" hex head stainless steel fasteners and driver bit furnished. Fasten retainer guard miters to to nailer with one splice plate under each end of miters. The retainer guard must insert into the grooves of the splice plate. Next locate and install spillouts and scuppers with G500, 2" fasteners and splice plates.

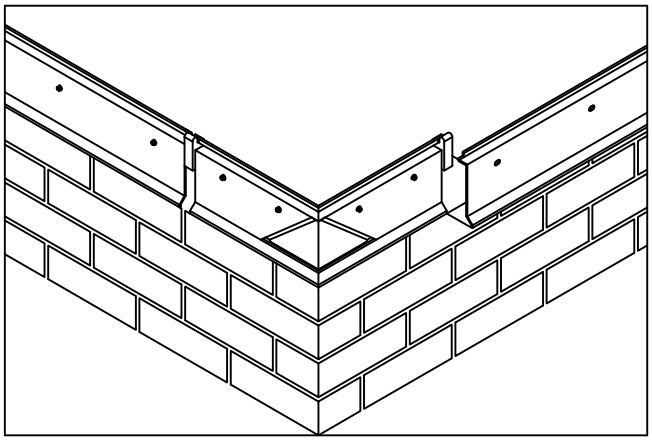

5. Retainer Guard (Installation)

Position 12'-0" sections of retainer guard with applied G500 as shown in steps 2 & 3 overlapping splice plate and butting snugly into gasket. Allow 3/8" space between retainer guards. Install splice plate at other end of 12'-0" guard. Fasten retainer guard 12" O.C. through slots using the 2" stainless steel fasteners. The retainer guard must insert into the grooves of the splice plate. Field cut sections as necessary.

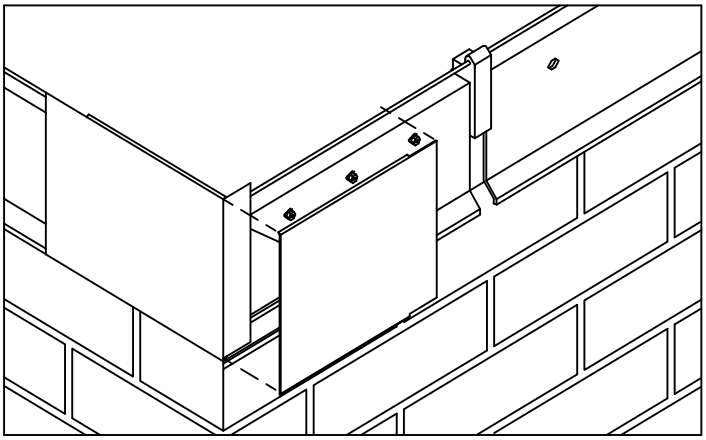

6. Fascia Miters Covers

Install 2-piece "snap-on" fascia miter covers first by snapping on fascia corner cover with 90° (degree) tab, followed by corner cover without the tab. Simply position the cover atop retainer guard with palm of hand apply slight pressure downward until engaged to retainer guard.

IMPORTANT! Be sure to remove protective plastic film prior to installing each fascia section.

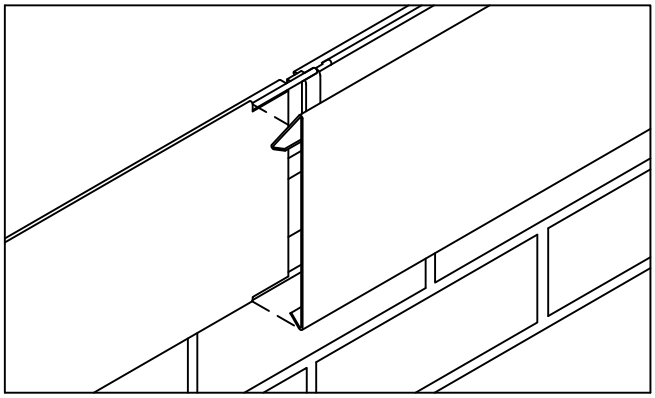

7. Fascia Panels

Position 12'-0" fascia panels on top of retainer guard and overlap preceeding panel approximately 1" at notches provided. Fascia covers shall be installed from right to left as seen from rooftop. With fascia panels in correct position atop retainer guard, simply snap each section onto retainer guard by applying downward pressure with palm of the hand until the fascia cover is fully engaged along the entire length. Continue to install fascia covers, field cutting where necessary using fine tooth hacksaw.
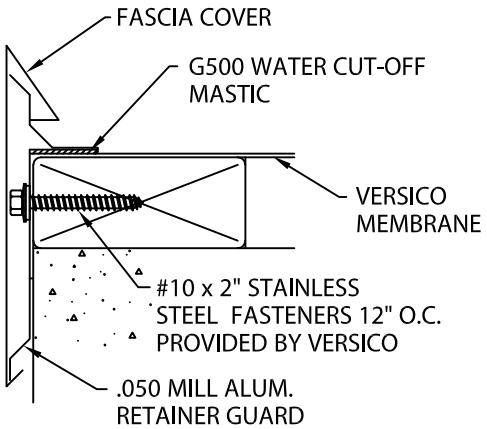
TYPICAL INSTALLATION