FLEXLOCK FLS ROOF EDGE

FULLY ADHERED OR MECHANICALLY ATTACHED SINGLE-PLY VERSION
WITH STIFFENING BAND

FM APPROVED

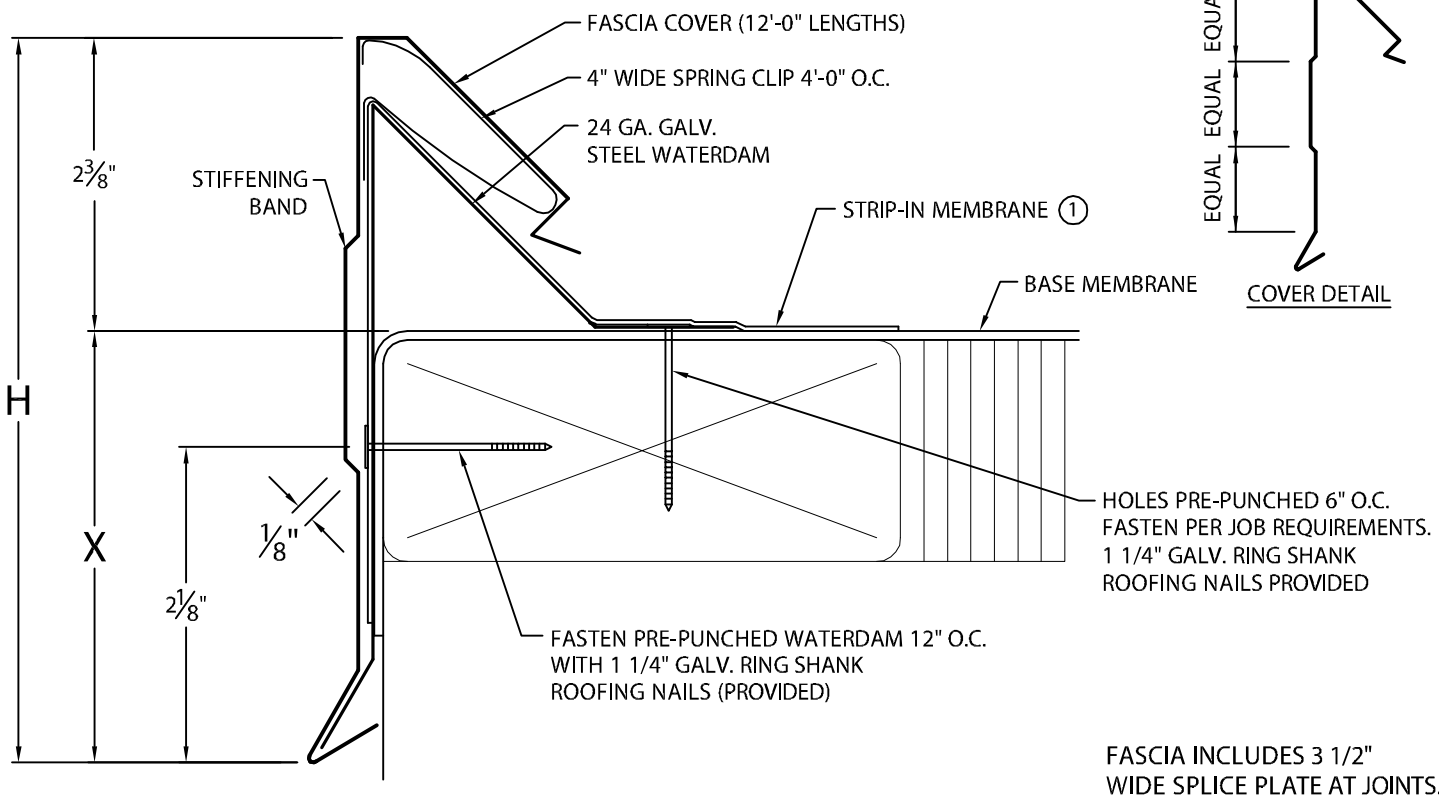

FASCIA INCLUDES 3 1/2"
WIDE SPLICE PLATE AT JOINTS.

① STANDARD FASCIA WILL NOT FUNCTION WITH TPO OR PVC STRIP-IN MEMBRANE THICKER THAN .060".

② WELDED ACCESSORIES REQUIRE A MINIMUM OF MATERIAL THICKNESS OF .050"

NOTE: -- UNLESS OTHERWISE NOTED, FABRICATION OF MITERS AND ACCESSORIES ARE FURNISHED STANDARD.

FLEXLOCK FLS ROOF EDGE DIMENSIONS

PRODUCT ID. NO.	H DIM	X DIM	NAILER COVERAGE
☐ FA-95S	9 3/4"	7 3/8"	4 NAILERS
☐ FA-110S	11 1/4"	8 7/8"	5 NAILERS
☐ FA-125S	12 3/4"	10 3/8"	6 NAILERS

ANSI/SPRI/FM 4435/ ES-1 DESIGN PRESSURE	FA-95 TO FA-125 IN .050 OR .063" - 116 psf

AUTHORIZED SIGNATURE:

APPROVED BY: _____

DATE: _____

MATERIAL:

☐ 24 GA. GALV. STEEL ☐ .050" ALUMINUM
☐ .040" ALUMINUM ☐ .063" ALUMINUM
☐ OTHER _____

COLOR:_____ FINISH:_____

QUANTITIES:

_____ LINEAL FEET 12'-0" LENGTHS
_____ OUTSIDE MITER(S) @ 90°
_____ INSIDE MITER(S) @ 90°
_____ RIGHT ENDCAP(S)
_____ LEFT ENDCAP(S)
_____ RIGHT ENDWALL FLASHING(S)
_____ LEFT ENDWALL FLASHING(S)
_____ OVERFLOW SCUPPER(S) STYLE____A____B
_____ SPILLOUT SCUPPER(S) STYLE____A____B
_____ DOWNSPOUT SCUPPER(S) STYLE____A____B
(_____X_____) SIZE

SPECIFY ACCESSORY TYPE:
☐ WELDED ②
☐ STANDARD

A: TAPERED 1 1/2" DROP
B: FLAT

FOR NON-90 MITERS SEE PRINT APPROVAL #28010-3436

PROJECT:

ARCHITECT:

ROOFING CONTRACTOR:

REPRESENTATIVE/DISTRIBUTOR:

CUSTOMER SERVICE
PHONE: 800-969-0108
FAX: 610-916-9501

DATE: 11/14/16	SHT.#____ OF ____	
DRN BY: JJC	DWG# 28010-21552	D
CKD BY: SAK		