CARLISLE SYNTEC SYSTEMS

FM APPROVED

SECUREDGE SYSTEM 200 FASCIA

SINGLE-PLY APPLICATION, SNAP-ON VERSION

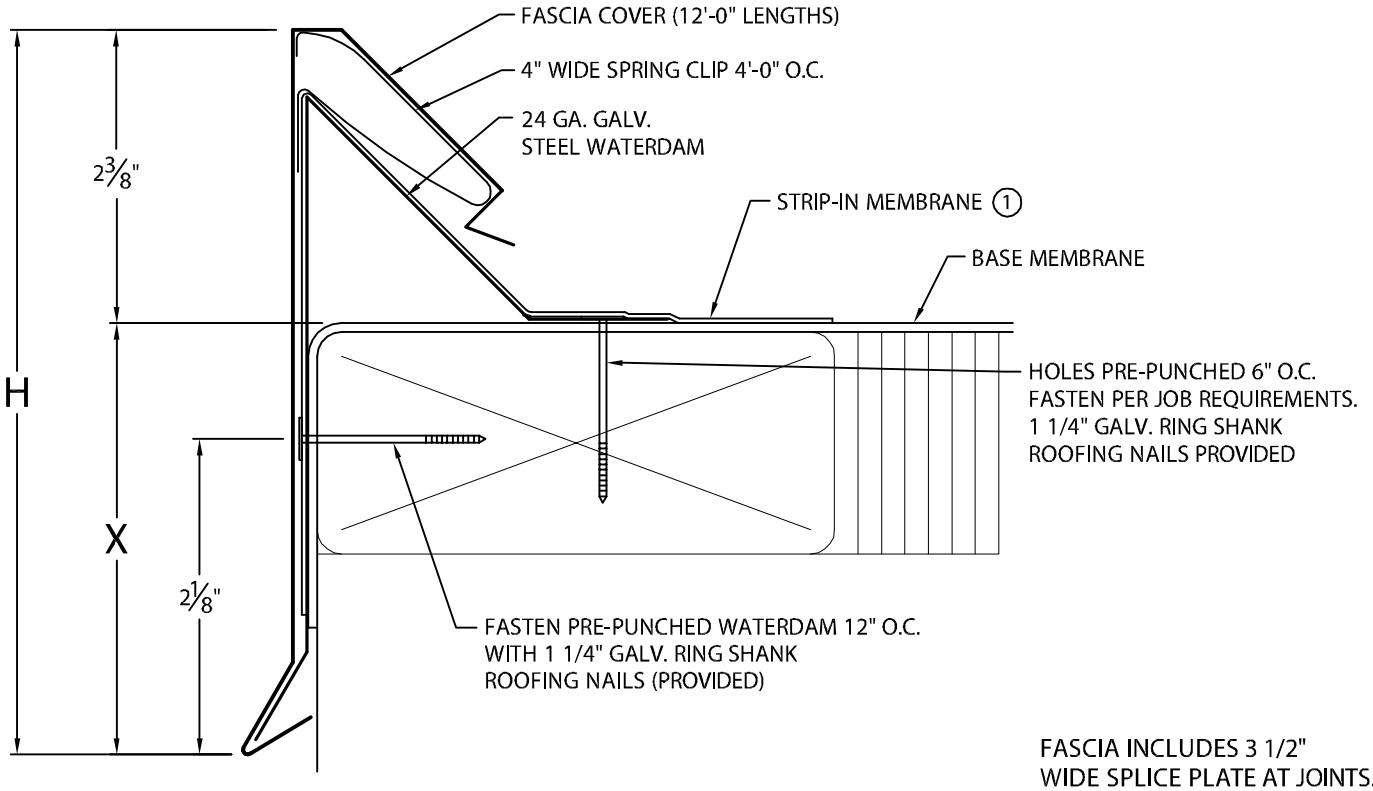

FASCIA INCLUDES 3 1/2" WIDE SPLICE PLATE AT JOINTS.

(1) STANDARD FASCIA WILL NOT FUNCTION WITH TPO OR PVC STRIP-IN MEMBRANE THICKER THAN .060".

(2) OIL CANNING CAN OCCUR ON LARGER FACE HEIGHTS. RECOMMEND .050" OR .063" FOR FACE HEIGHTS ABOVE 8¼"

(3) WELDED ACCESSORIES REQUIRE A MINIMUM OF MATERIAL THICKNESS OF .050"

NOTE: – UNLESS OTHERWISE NOTED, FABRICATION OF MITERS AND ACCESSORIES ARE FURNISHED STANDARD.

SECUREDGE SYSTEM 200 FASCIA DIMENSIONS

PRODUCT ID. NO.	H DIM	X DIM	NAILER COVERAGE
☐ FA-50	5 1/4"	2 7/8"	1 NAILER
☐ FA-65	6 3/4"	4 3/8"	2 NAILERS
☐ FA-80	8 1/4"	5 7/8"	3 NAILERS
☐ FA-95	9 3/4"	7 3/8"	4 NAILERS
☐ FA-110	11 1/4"	8 7/8"	5 NAILERS
☐ FA-125	12 3/4"	10 3/8"	6 NAILERS

ANSI/SPRI/FM 4435/ ES-1 DESIGN PRESSURE	FA-50 TO FA-80 IN 24 GA. OR .040" - 196 psf
	FA-50 TO FA-80 IN .050 OR .063" - 216 psf
	FA-95 TO FA-125 IN .050 OR .063" - 116 psf

AUTHORIZED SIGNATURE:

APPROVED BY: _____

DATE: _____

MATERIAL:

☐ 24 GA. GALV. STEEL (2) ☐ .050" ALUMINUM

☐ .040" ALUMINUM (2) ☐ .063" ALUMINUM

☐ OTHER _____

COLOR:_____ FINISH:_____

QUANTITIES:

_____ LINEAL FEET 12'-0" LENGTHS

_____ OUTSIDE MITER(S) @ 90°

_____ INSIDE MITER(S) @ 90°

_____ RIGHT ENDCAP(S)

_____ LEFT ENDCAP(S)

_____ RIGHT ENDWALL FLASHING(S)

_____ LEFT ENDWALL FLASHING(S)

_____ OVERFLOW SCUPPER(S) STYLE ☐A ☐B

_____ SPILLOUT SCUPPER(S) STYLE ☐A ☐B

_____ DOWNSPOUT SCUPPER(S) STYLE ☐A ☐B

(_____X_____) SIZE

A: TAPERED 1 1/2" DROP
B: FLAT

SPECIFY ACCESSORY TYPE:

☐ WELDED (3)

☐ STANDARD

FOR NON-90 MITERS SEE PRINT APPROVAL #15010-1625

PROJECT:

ARCHITECT:

ROOFING CONTRACTOR:

REPRESENTATIVE/DISTRIBUTOR:

CUSTOMER SERVICE
866-458-3537
(METAL-ERA)

DATE: 09/23/16	SHT.#___ OF ___	
DRN BY: JJC	DWG# 15010-21527	E
CKD BY: SAK		