ELEVATE NON-WELDED RADIUS DRIP EDGE

WITH CONTINUOUS CLEAT

CONVEX RADIUS

FM APPROVED

PROVIDING A RADIUS

THE RADIUS MAY BE PROVIDED IN ONE OF TWO METHODS:

1.) THE ACTUAL KNOWN RADIUS IS

OR

2.) FIELD CONDITION MEASUREMENTS

NOTE: REFER TO ATTACHED WORKSHEET FOR FURTHER INFORMATION

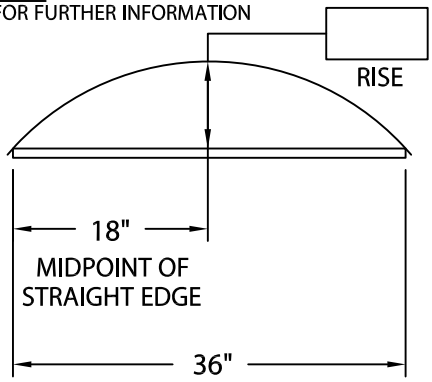

NOTE: CHECK MEASUREMENTS ALONG ENTIRE RADIUS.

DETAIL A

------ INDICATES AREAS THAT WILL BE SLIT AS NEEDED TO ACCOMMODATE RADIUS

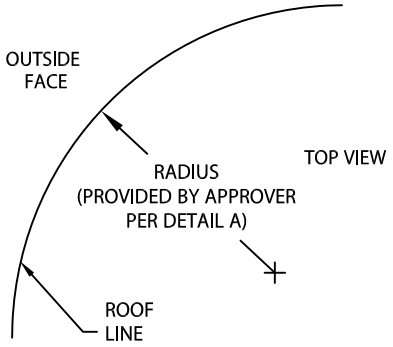

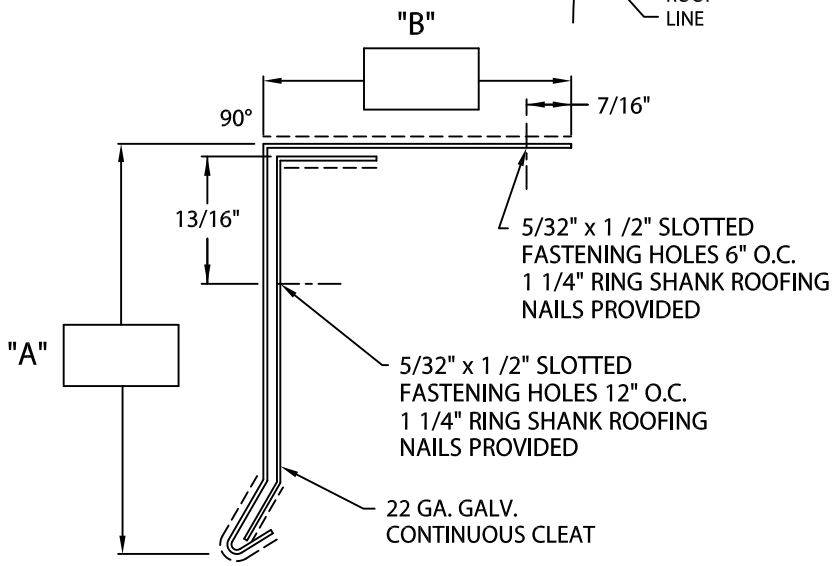

NOTES:

-- 6" WIDE CONCEALED SPLICE PLATES PROVIDED.

-- CONCEALED SPLICE PLATE MUST BE FIELD CAULKED TO PREVENT WATER ENTRY.

Fabrication will proceed only after receipt of signed print approval.

Print Approval:

Architect and/or contractor shall verify all dimensions, sizes and quantities. All products to be installed in strict accordance with Elevate's printed instructions.

Approved by: _____

Date: _____

MATERIAL:

☐ 24 GA. GALV. ☐ .050" ALUMINUM

☐ .040" ALUMINUM ☐ .063" ALUMINUM

COLOR: _____

FINISH: _____

QUANTITIES:

_____ LINEAL FEET (12'-0" LENGTHS)

PROJECT:

ARCHITECT:

ROOFING CONTRACTOR:

REPRESENTATIVE/DISTRIBUTOR:

ELEVATE

ELEVATE
26 CENTURY BLVD.
SUITE 205
NASHVILLE, TN 37214
CONTACT YOUR LOCAL ELEVATE REPRESENTATIVE

DATE: 03/20/23	SHT.#____ OF ____	
DRN BY: MLM	DWG# 13010-13356	E
CKD BY: MM		