FIBERTITE CANTED FASCIA

EXISTING BEVELED WOOD NAILER VERSION

ANSI/SPRI ES-1 DESIGN PRESSURE OF 190 psf

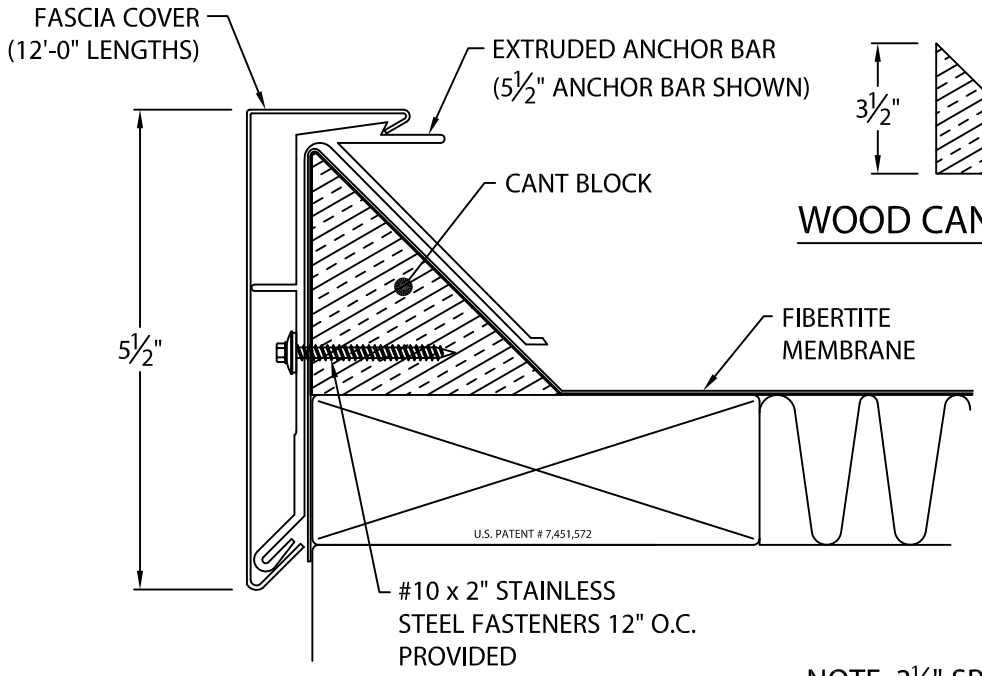

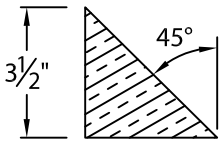

WOOD CANT PROFILE

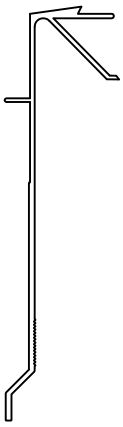

7½" EXTRUDED ANCHOR BAR

NOTE: 3½" SPLICE PLATES PROVIDED AT ALL JOINTS

* FASCIA SHOULD BE USED WITH FASCIA EXTENDER DUE TO LACK OF WOOD NAILER COVERAGE.

FIBERTITE CANTED FASCIA DIMENSIONS

PRODUCT ID. NO.	H DIM
☐ AEFC-55*	5 1/2"
☐ AEFC-75	7 1/2"

MATERIAL:

☐ 24 GA. GALV. STEEL ☐ .050" ALUMINUM

☐ 22 GA. GALV. STEEL ☐ .063" ALUMINUM

☐ .040" ALUMINUM ☐ OTHER _____

COLOR:_____ FINISH:_____

Fabrication will proceed only after receipt of signed print approval.

Print Approval:

Architect and/or contractor shall verify all dimensions, sizes and quantities. All products to be installed in strict accordance with FiberTite's printed instructions.

Approved by:_____

Date:_____

QUANTITIES:

_____ LINEAL FEET 12'-0" LENGTHS

_____ OUTSIDE MITER(S) @ 90°

_____ INSIDE MITER(S) @ 90°

_____ OVERFLOW SCUPPER(S) STYLE____A____B

_____ SPILLOUT SCUPPER(S) STYLE____A____B

_____ DOWNSPOUT SCUPPER(S) STYLE____A____B

(_____X_____) SIZE A: TAPERED 1 1/2" DROP
B: FLAT

FOR NON-90 MITERS SEE PRINT APPROVAL #23010-2417

PROJECT:

ARCHITECT:

ROOFING CONTRACTOR:

REPRESENTATIVE/DISTRIBUTOR:

Customer Service

1-800-355-6416

Fiberlite Seaman Corporation
INTELLIGENT ROOFING SOLUTIONS

DATE: 06/29/17

DRN BY: JAB

CKD BY: SAK

SHT.#_____ OF _____

DWG# 23010-2437

I