PRESTO-TITE CANTED OR LARGE FACE HEIGHT CANTED FASCIA

EXISTING BEVELED WOOD NAILER VERSION

DETAILS

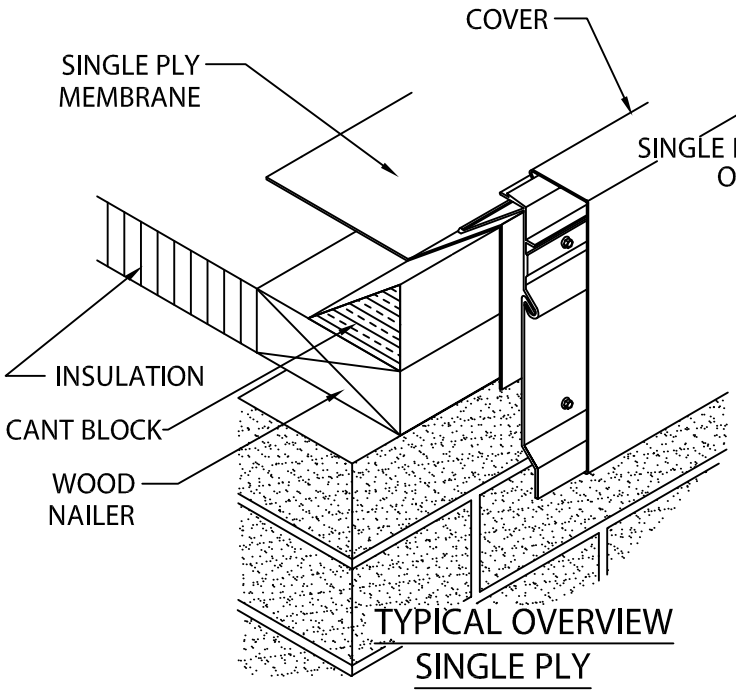

TYPICAL OVERVIEW
SINGLE PLY

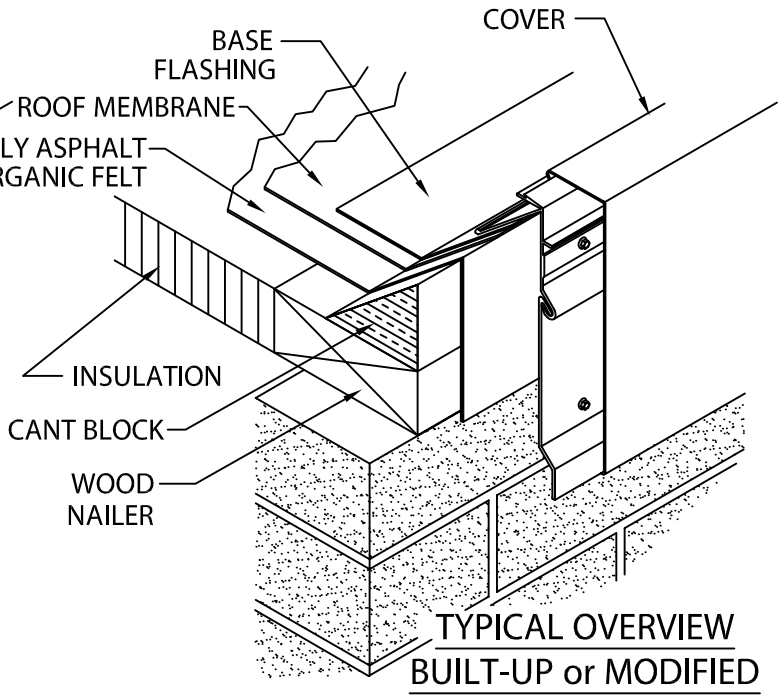

TYPICAL OVERVIEW
BUILT-UP or MODIFIED

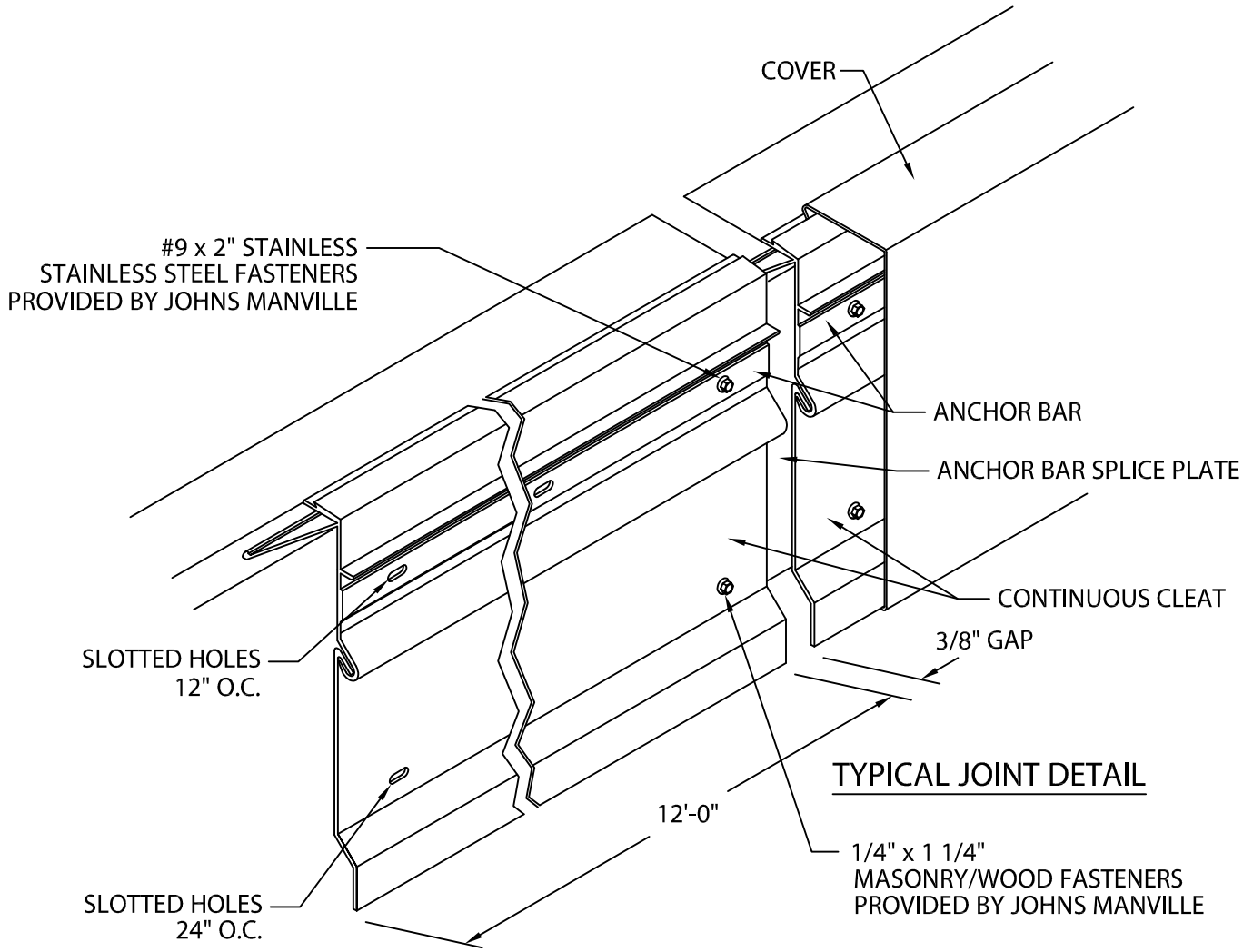

TYPICAL JOINT DETAIL

Johns Manville	USA: 800-223-8317 Canada: 800-445-1500	DATE: 11/05/03 DRN BY: JWH CKD BY: SAK	SHT.#____ OF ____ DWG# 16510-2565 D