PRESTO-TITE LARGE FACE HEIGHT CANTED FASCIA

FM APPROVED

GALVANIZED WATERDAM VERSION

ANSI/SPRI ES-1 DESIGN PRESSURE OF 139 psf

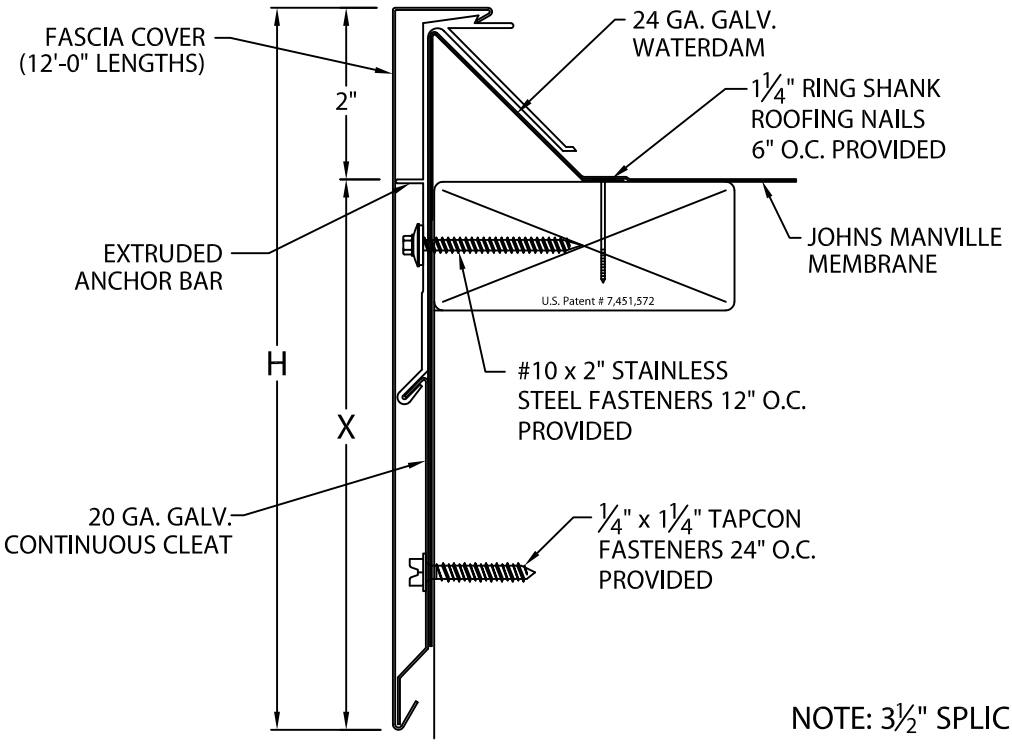

MIAMI-DADE COUNTY APPROVED

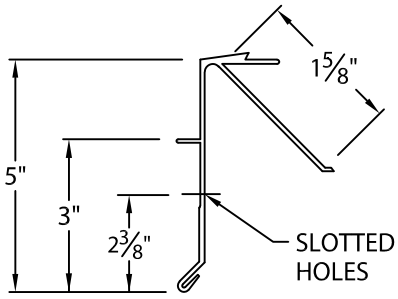

EXTRUDED PROFILE

NOTE: 3½" SPLICE PLATES PROVIDED AT ALL JOINTS

PRESTO-TITE LARGE FACE HEIGHT CANTED FASCIA DIMENSIONS

PRODUCT ID. NO.	H DIM	X DIM
☐ AEFC-902	9"	7"
☐ AEFC-1052	10 1/2"	8 1/2"
☐ AEFC-1202	12"	10"
☐ AEFC-1352	13 1/2"	11 1/2"

MATERIAL:

☐ 22 GA. GALV. STEEL ☐ .063" ALUMINUM

☐ .050" ALUMINUM ☐ OTHER _____

COLOR:_____ FINISH:_____

Fabrication will proceed only after receipt of signed print approval.

Print Approval:

Architect and/or contractor shall verify all dimensions, sizes and quantities. All products to be installed in strict accordance with Johns Manville's printed instructions.

Approved by: _____

Date: _____

QUANTITIES:

_____ LINEAL FEET 12'-0" LENGTHS

_____ OUTSIDE MITER(S) @ 90°

_____ INSIDE MITER(S) @ 90°

_____ OVERFLOW SCUPPER(S) STYLE_____A_____B

_____ SPILLOUT SCUPPER(S) STYLE_____A_____B

_____ DOWNSPOUT SCUPPER(S) STYLE_____A_____B

(_____X_____) SIZE A: TAPERED 1 1/2" DROP
B: FLAT

FOR NON-90 MITERS SEE PRINT APPROVAL #16010-2320

PROJECT:

ARCHITECT:

ROOFING CONTRACTOR:

REPRESENTATIVE/DISTRIBUTOR:

51 Lexington Street; Lewiston, ME 04240
CUSTOMER SERVICE: 800-223-8317 USA
800-445-1500 Canada
TECHNICAL SERVICE: 800-445-1500 USA & Canada
FAX: 207-784-0125
OTHER AREAS CALL: 207-784-0123

JM Johns Manville

DATE: 03/06/19

DRN BY: ZS

CKD BY: SAK

SHT.#____ OF ____

DWG# 16010-2560 L