SECUREDGE 2000 EXTENDED FASCIA

FULLY ADHERED OR MECHANICALLY ATTACHED SINGLE-PLY VERSION

ANSI/SPRI ES-1 DESIGN PRESSURE OF 176 psf

FM APPROVED

MIAMI-DADE COUNTY
NOA No. 13-0419.03 12/11/18
Miami-Dade County, Florida

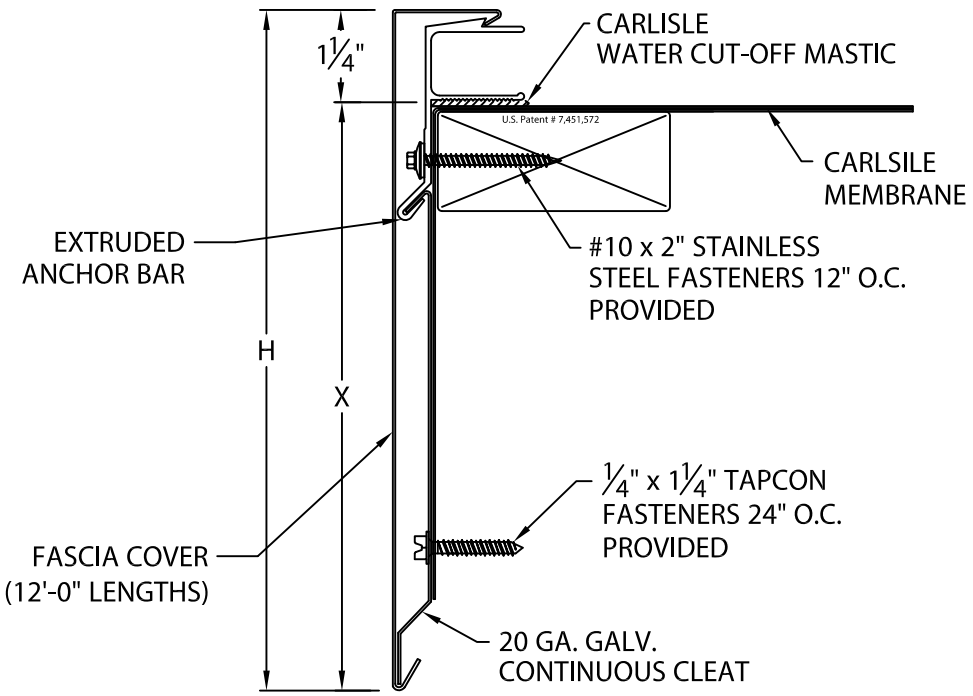

NOTE: 3½" SPLICE PLATES PROVIDED AT ALL JOINTS

SECUREDGE 2000 EXTENDED FASCIA DIMENSIONS

PRODUCT ID. NO.	H DIM	X DIM
☐ AEF-85	8 1/2"	7 1/4"
☐ AEF-100	10"	8 3/4"
☐ AEF-115	11 1/2"	10 1/4"
☐ AEF-130	13"	11 3/4"

MATERIAL:

☐ 22 GA. GALV. STEEL ☐ .063" ALUMINUM

☐ .050" ALUMINUM ☐ OTHER _____

COLOR:_____ FINISH:_____

Fabrication will proceed only after receipt of signed print approval.

Print Approval:

Architect and/or contractor shall verify all dimensions, sizes and quantities. All products to be installed in strict accordance with Carlisle SynTec, Inc.'s printed instructions.

Approved by: _____

Date: _____

QUANTITIES:

_____ LINEAL FEET 12'-0" LENGTHS

_____ Outside Miter(s) @ 90°

_____ Inside Miter(s) @ 90°

_____ OVERFLOW SCUPPER(S) STYLE____A____B

_____ SPILLOUT SCUPPER(S) STYLE____A____B

_____ DOWNSPOUT SCUPPER(S) STYLE____A____B

(_____X_____) SIZE

A: TAPERED 1 1/2" DROP
B: FLAT

FOR NON-90 MITERS SEE PRINT APPROVAL #15010-1625

PROJECT:

ARCHITECT:

ROOFING CONTRACTOR:

REPRESENTATIVE/DISTRIBUTOR:

Customer Service
866-458-3537
(Metal-Era)

CARLISLE SYNTEC SYSTEMS

DATE: 03/21/17
DRN BY: JAB
CKD BY: SAK

SHT.#____ OF ____

DWG# 15010-1584

1