ANCHOR-TITE STANDARD FASCIA

FM APPROVED

FULLY ADHERED OR MECHANICALLY ATTACHED SINGLE-PLY VERSION

ANSI/SPRI ES-1 DESIGN PRESSURE OF UP TO 275 psf

PARAPET WALL, EXISTING MASONRY APPLICATION

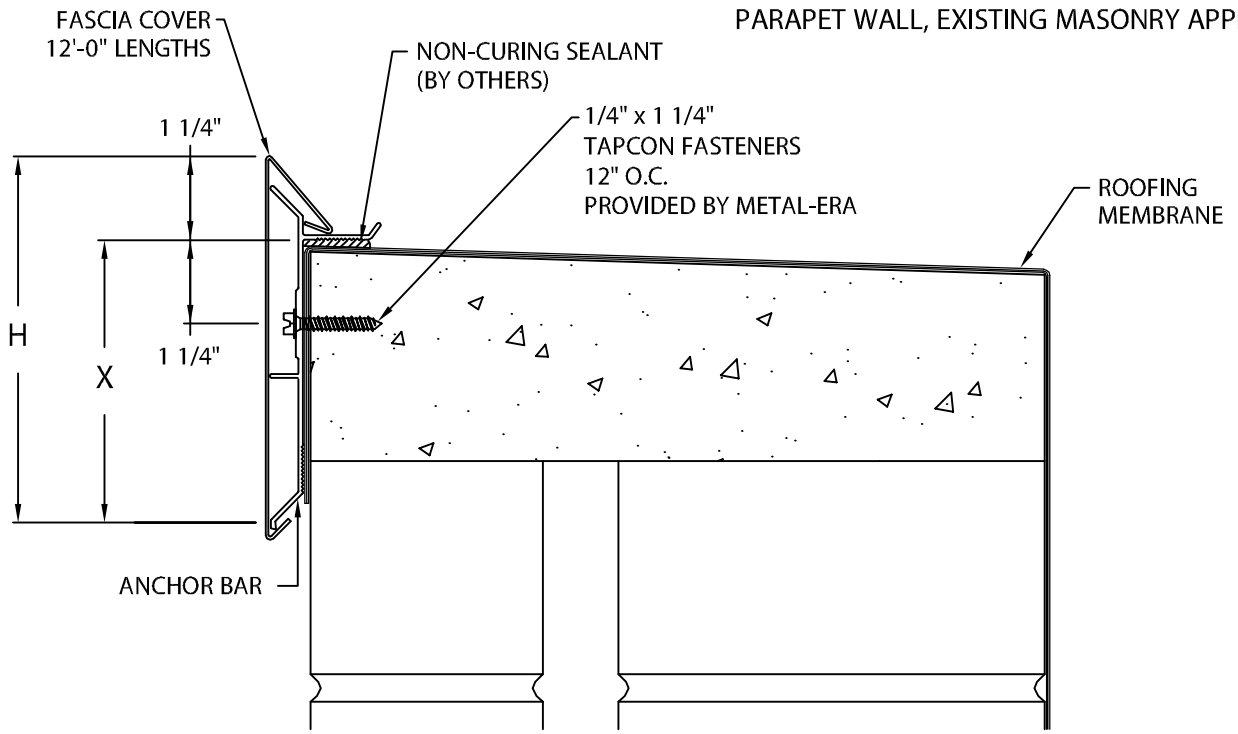

ANCHOR-TITE STANDARD FASCIA DIMENSIONS

PRODUCT ID. NO.	H DIM	X DIM	NAILER COVERAGE
☐ AF-40	4" (102 mm)	2 3/4" (70 mm)	1 NAILER
☐ AF-55	5 1/2" (140 mm)	4 1/4" (108 mm)	2 NAILERS
☐ AF-70	7" (178 mm)	5 3/4" (146 mm)	3 NAILERS
☐ AF-85	8 1/2" (216 mm)	7 1/4" (184 mm)	4 NAILERS

MATERIAL:

☐ 24 Ga. (.65 mm) Galv. Steel

☐ .040" (1.01 mm) Aluminum

☐ OTHER _____

Color:_____

Finish:_____

Fabrication will proceed only after receipt of signed print approval.

Print Approval:

Architect and/or contractor shall verify all dimensions, sizes and quantities. All products to be installed in strict accordance with Metal-Era's printed instructions.

Approved by: _____

Date: _____

QUANTITIES:

_____ Lineal Feet 12'-0" (3.65m) Lengths

_____ Outside Miters @ 90°

_____ Inside Miters @ 90°

_____ Overflow Scupper Style ☐ A ☐ B

_____ Spillout Scupper Style ☐ A ☐ B

_____ Downspout Scupper Style ☐ A ☐ B

(_____X_____) Size

A: Tapered 1 1/2" Drop
B: Flat

FOR NON-90° MITERS SEE PRINT APPROVAL #11010-1103

PROJECT:

ARCHITECT:

ROOFING CONTRACTOR:

REPRESENTATIVE/DISTRIBUTOR:

Corporate Offices, Manufacturing
1600 Airport Road; Waukesha, WI 53188
Phone: 800-558-2162
Fax: 800-373-9156
www.metalera.com

METAL-ERA®
Roof Edge Solutions

DATE: 08/25/17

DRN BY: JJC

CKD BY: SAK

SHT.#____ OF ____

DWG# 11010-8923

C